Lecture X

Capstone Project

© 2024 Open Project Space, Institute of Electrical and Electronics Engineers at the University of California, Irvine. All Rights Reserved.

SECTION I

Winter Quarter Recap

Remote Control PCB Capstone

- Design your own remote control **PCB** for the Capstone Rover Project.
- Due date: 4/5/2026 at 11:59PM
- This project is optional!
  - We will have PCB remotes available if you don't want to make your own

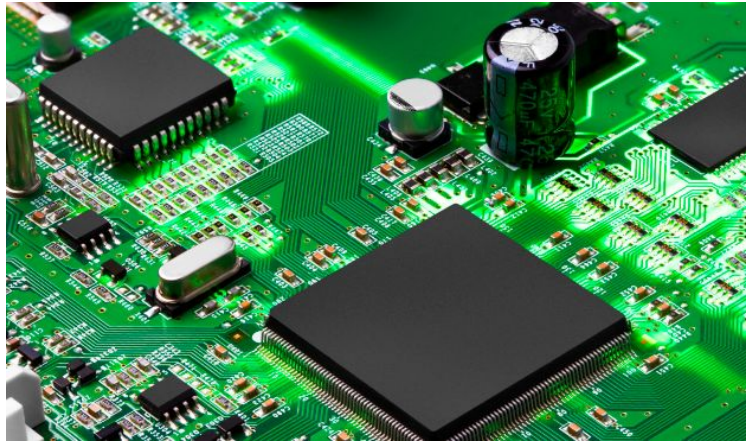

Learning Concepts:

- KiCAD
- Schematics
- PCB Design
- PCB Manufacturing

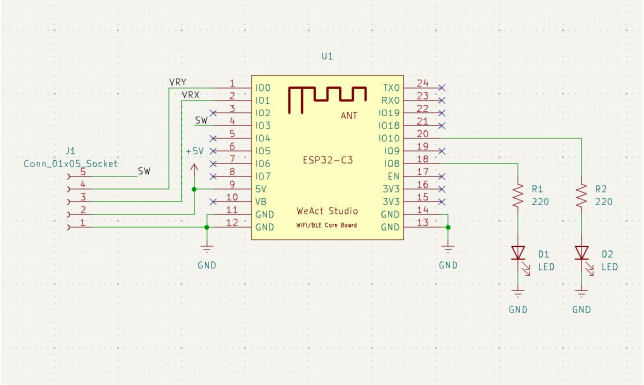

SECTION II

Capstone Overview

Capstone Project

- Build and control a **Rover** remotely with a custom PCB.
- Suggested due date for rover competition: 5/22/2026
- Due date for refund: 6/5/2026 at 11:59PM

Learning Concepts:

- Everything!!!

Capstone Project Requirements

Build a **remote-controlled rover**

- The rover must be controlled wirelessly via the remote control
- The remote control should use a joystick for user input
- A user should be able to intuitively use the joystick to control the rover
    - This means that pivoting the joystick left should move the rover left, not backward
- The rover must have an autonomous mode (clicking the joystick switches modes)
    - The rover should automatically be able to avoid obstacles based on the algorithm you write

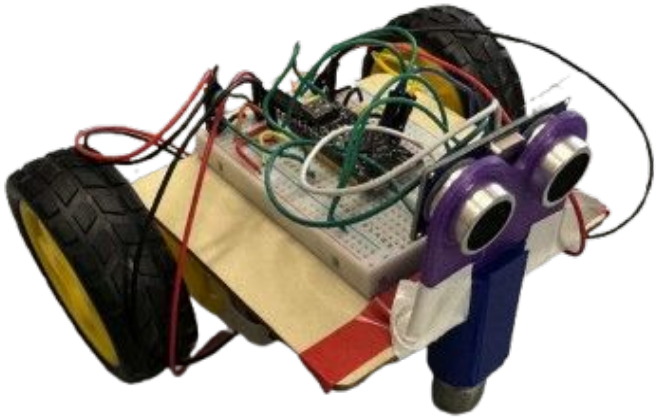

Capstone Project Requirements (Cont.)

- You must design a PCB for the remote control
  - The PCB must adhere to the provided manufacturer constraints.
    - Search ‘JLCPCB manufacturing capabilities’
  - The PCB must be **less than 100x100mm in size**
- The rover must be able to move forward, backward, left, and right in response to commands sent by the remote
- Lastly, the rover must be stable and reliable
  - There should be no spontaneous movement, no wireless connection issues, and absolutely no sparks.

Capstone Project Schedule

Week	Lecture	Workshop
1	RC Rover: Getting Started	
2		Capstone Rover Assembly
3	Senior Design Project Showcase	
4		Capstone PCB Assembly
5	OPS Midterm	
6		Capstone Programming
7		
8	End of Year Review/Reflection + Comp + Food	
9		
10	Capstone Submission Deadline	

Capstone Rover Assembly (Week 2)

- We will be assembling the rover first w/ a Hot Glue Gun
- Parts needed:
  - x2 Gearbox Motor
  - x2 Wheel
  - x1 Ultrasonic Sensor Mount
  - x1 Ball Caster + Mount
  - x1 9V Battery Holder
  - x1 4” x 4” Wood Plate
  - x1 Breadboard
  - x1 Battery (If your battery is weak, stop by lab hours for a new one)
  - x1 9V Battery Snap Connector with Dupont Terminals

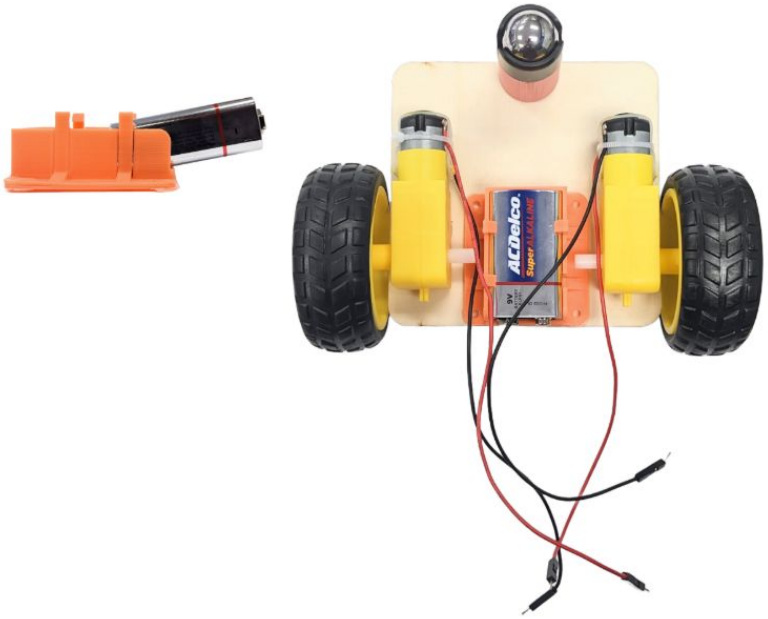

Capstone PCB Assembly (Week 4)

- We will be soldering and assembling the Remote Control PCB
- Parts needed:
  - x1 Remote Control PCB
  - x2 1x12 Socket Header
  - x1 1x5 Socket Header, Right Angle
  - x2 220Ω Resistor
  - x2 LED (Red, Green)

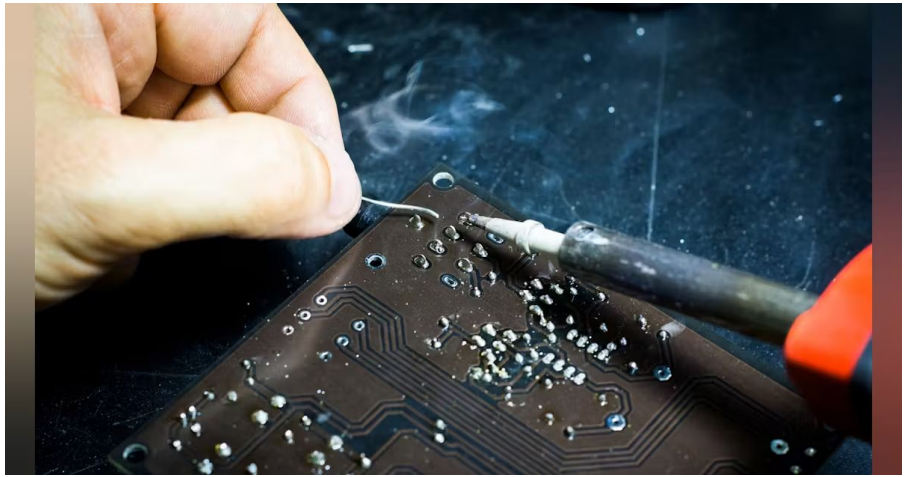

Capstone Programming (Week 6)

- You will be programming the Remote Control and Rover to meet Project Requirements
- Core Concepts:
  - digitalRead()/digitalWrite()
  - analogRead()/analogWrite()
  - Reading Datasheets
  - Reading Pinout Diagrams
  - Related libraries (ESP32Servo.h, ESP32 Wifi)

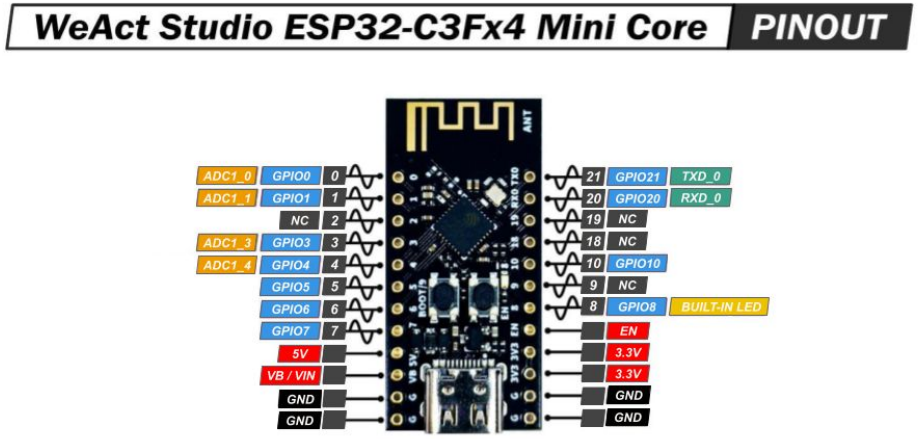

Capstone Project Deadlines

Deadlines

- PCB Design Submission: **April 5th, 2026** at **11:59 PM**
  - After the deadline, we will review the submissions and send them in a bulk order to JLCPCB for manufacturing
  - If you submit late, your PCB will not be manufactured, but you can still receive full marks (before the final submission deadline)
- Recommended Submission: **May 22nd, 2026** at **11:59 pm**
- Final Submission for Refunds: **June 5th, 2026** at **11:59 PM**

One More Thing…

- **Raffle Prizes for Completing Projects!**
  - Each completed project = 1 Raffle Ticket
  - Completed Capstone Project = 3 Raffle Tickets
- Tickets will be drawn for:
  - Gaming Keyboard + Mouse (1 Winner)
  - Soldering Kits (2 Winners)
  - In-n-Out Gift Card (3 Winners)

SECTION III

Getting Started

Brainstorming the Problem

- Let’s pretend someone came to you and asked you to make a rover for them…
- As you brainstorm, consider your **design constraints** early on…
  - **Cost** – How much are you willing to spend on parts?
  - **Time** – How much time can you commit?
  - **Complexity** – Do you have a sufficient understanding to create this?
  - **Equipment** – What tools, parts, and lab space are available to you?

Implementing Solutions *Safely*

- Always consider safety requirements when working with **high voltage and current:**
  - Make sure designs are properly grounded
  - Watch where power is dissipated… Heat can build up *fast*
  - Exercise caution when testing live AC circuits so you don’t electrocute yourself
  - Always check that power sources are unplugged before manipulating circuits

SECTION IV

Picking Parts and Drawing the Schematic

Picking Parts

- Now, it's time to start looking for parts to buy…
- Choose a seller that's right for you!
  - If you want **quality parts** and **reliable shipping**, consider buying from a more reputable supplier:
    - DigiKey, Mouser, or Newark
  - If you want to **save money** with a reasonable chance of quality parts, consider one of the following options:
    - Amazon, Ebay, or Aliexpress
    - **Exercise caution**: Examine the listings' reviews and descriptions

Picking Parts from DigiKey

I/A

- An advantage to buying from an electronics supplier is that they typically have **part search tools**
  - You can **define all the part's specifications to refine the search**
  - Ex) Looking for a resistor? Specify its resistance (Ω), tolerance, max power rating, and packaging
- Let's use DigiKey to demonstrate the power of a parts search tool by looking for the following resistor:
  - 130Ω ± 5%, THT, Axial, 2W, Cut Tape

DigiKey

- Don't know what parts do, and how to connect them so that they could operate properly? Solution: **Read the datasheet**

Datasheets

- A **datasheet** is a document that tells you how a part works and how to operate it.
- Can usually be found under parts description
- Reading datasheets is an essential skill of any engineer!

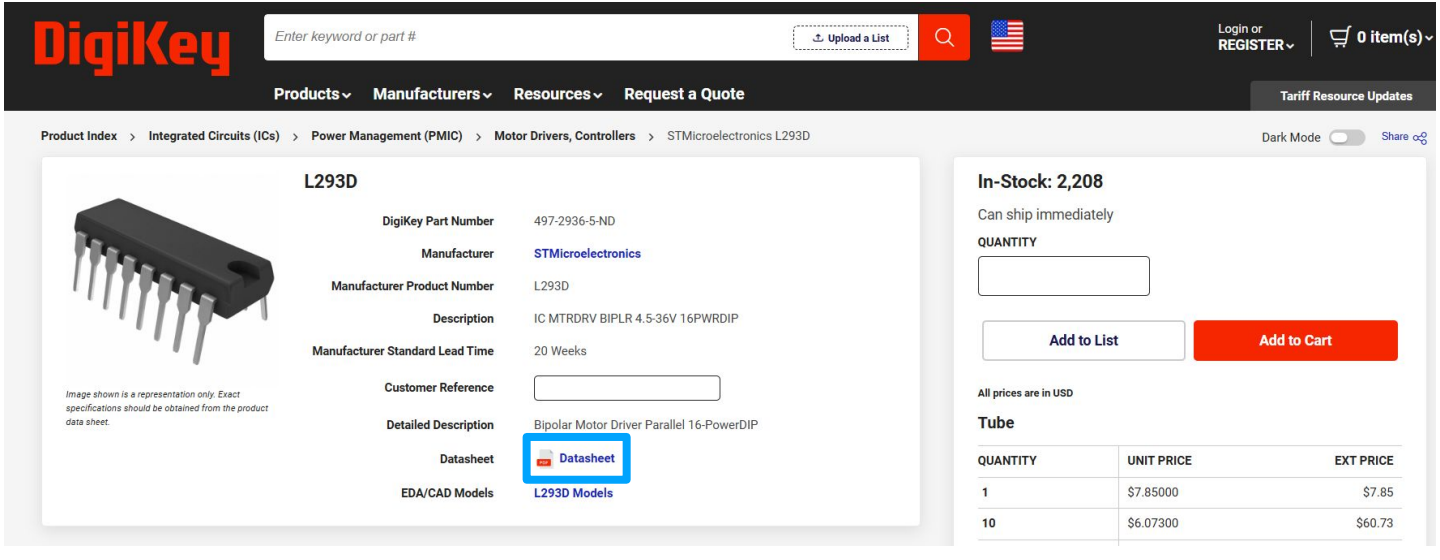

Reading Datasheets

- Use Ctrl + F to navigate and find specific information you need

1. Start with the Overview / General Description
   a. Typically the first page
   b. Key features
   c. Gives you the big picture

Product Folder | Sample & Buy | Technical Documents | Tools & Software | Support & Community

TEXAS INSTRUMENTS

L293, L293D

SLRS008D – SEPTEMBER 1986 – REVISED JANUARY 2016

L293x Quadruple Half-H Drivers

1 Features

- Wide Supply-Voltage Range: 4.5 V to 36 V
- Separate Input-Logic Supply
- Internal ESD Protection
- High-Noise-Immunity Inputs
- Output Current 1 A Per Channel (600 mA for L293D)
- Peak Output Current 2 A Per Channel (1.2 A for L293D)
- Output Clamp Diodes for Inductive Transient Suppression (L293D)

2 Applications

- Stepper Motor Drivers
- DC Motor Drivers
- Latching Relay Drivers

3 Description

The L293 and L293D devices are quadruple high-current half-H drivers. The L293 is designed to provide bidirectional drive currents of up to 1 A at voltages from 4.5 V to 36 V. The L293D is designed to provide bidirectional drive currents of up to 600-mA at voltages from 4.5 V to 36 V. Both devices are designed to drive inductive loads such as relays, solenoids, DC and bipolar stepping motors, as well as other high-current/high-voltage loads in positive-supply applications.

Each output is a complete totem-pole drive circuit, with a Darlington transistor sink and a pseudo-Darlington source. Drivers are enabled in pairs, with drivers 1 and 2 enabled by 1,2EN and drivers 3 and 4 enabled by 3,4EN.

The L293 and L293D are characterized for operation from 0°C to 70°C.

Device Information(1)

PART NUMBER	PACKAGE	BODY SIZE (NOM)
L293NE	PDIP (16)	19.80 mm × 6.35 mm
L293DNE	PDIP (16)	19.80 mm × 6.35 mm

(1) For all available packages, see the orderable addendum at the end of the data sheet.

Logic Diagram

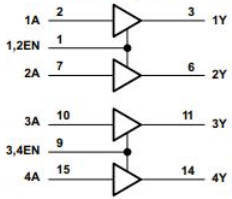

Reading Datasheets (Cont.)

2. Look at the Pinout Diagram

   a. Tells you what pins do what
      i. Power and ground pins
      ii. En pins (active low or active high)
      iii. Input/output pins
      iv. Special function pins

3. Make sure to respect the Absolute Maximum Ratings!

   a. You won't have to worry too much about this in OPS… (Highest Supply Voltage we use is 9V)

5 Pin Configuration and Functions

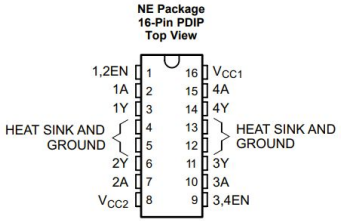

Pin Functions

PIN		TYPE	DESCRIPTION
NAME	NO.		
1,2EN	1	I	Enable driver channels 1 and 2 (active high input)
<1:4>A	2, 7, 10, 15	I	Driver inputs, noninverting
<1:4>Y	3, 6, 11, 14	O	Driver outputs
3,4EN	9	I	Enable driver channels 3 and 4 (active high input)
GROUND	4, 5, 12, 13	—	Device ground and heat sink pin. Connect to printed-circuit-board ground plane with multiple solid vias
V_{CC1}	16	—	5-V supply for internal logic translation
V_{CC2}	8	—	Power VCC for drivers 4.5 V to 36 V

6.1 Absolute Maximum Ratings

over operating free-air temperature range (unless otherwise noted)[1]

	MIN	MAX	UNIT
Supply voltage, V_{CC1}[2]		36	V
Output supply voltage, V_{CC2}		36	V
Input voltage, V_I		7	V
Output voltage, V_O	–3	V_{CC2} + 3	V
Peak output current, I_O (nonrepetitive, t ≤ 5 ms): L293	–2	2	A
Peak output current, I_O (nonrepetitive, t ≤ 100 µs): L293D	–1.2	1.2	A
Continuous output current, I_O: L293	–1	1	A
Continuous output current, I_O: L293D	–600	600	mA
Maximum junction temperature, T_J		150	°C
Storage temperature, T_{stg}	–65	150	°C

Drawing the Schematic

- **While you pick the parts**, you should also **draw the first draft schematic**
  - The advantage of performing these tasks simultaneously is that **you research the datasheets/pinouts before committing to the parts**
- Use a schematic capture tool:
  - Fritzing (Small one-time license fee)
    - Fritzing is beginner-friendly and offers a “breadboard”-level visual representation of parts and connections
  - KiCAD EDA (Free)
    - If your design is more sophisticated, KiCAD is the better option

SECTION V

Preliminary Design

Ultrasonic Sensor (Review)

- Connect the **VCC** pin of the ultrasonic sensor to the **5V** pin of ESP32
- Connect the TRIG and ECHO pins to any GPIO pin of the ESP32
- Connect the **GND** of the ultrasonic sensor to the **GND** pin of the ESP32

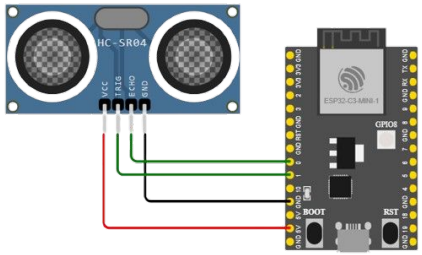


```
void loop() {
  digitalWrite(trigPin, LOW);   // Set trigger pin to LOW intially
  delayMicroseconds(2);         // Add slight delay so there is a definite LOW period for tri
  digitalWrite(trigPin, HIGH);  // Set trigger pin to HIGH to begin transmitting ultrasonic s
  delayMicroseconds(10);        // Minimum HIGH signal length (specified by the datasheet)
  digitalWrite(trigPin, LOW);   // Reset trigger pin back to LOW

  int duration = pulseIn(echoPin, HIGH);  // pulseIn measures how long the echo pin is HIGH b
  int distance = duration / 58.0;         // Conversion formula to centimeters (specified by
```

Fig 2. Example of distance measurement using pulseIn()

Analog Joystick

- You will be using the Analog Joystick to control the rover
- The GND and +5V pins power the Joystick
- VX and VY carry analog signals for the horizontal and vertical position of the joystick, respectively. These pins must be connected to **analog pins** on the ESP32
- When you use a button or, in our case, the SW pin of the joystick, you should use a pull-up resistor.
    - Instead of building an external circuit, you can use an internal pull-up resistor in the ESP32. You may do so by setting the pin mode as follows:
        - `pinMode(pin, INPUT_PULLUP);`

Sending Joystick Data

- Use the RemoteData class to send data
- Ex. RemoteData data;
  - data.vx = 34;
  - data.vy = 70;
  - data.sw = 0;
  - send_data(receiverAddress, data);

```
#include <WifiConfig.h>
//Find the mac address of your receiver ESP32 first, then enter it in here:
uint8_t receiverAddress[] = {0x34, 0xB7, 0xDA, 0xF6, 0x3E, 0x78};

RemoteData data;      // global initialization of RemoteData


void setup()
{
  Serial.begin(115200);                // Serial setup
  wifi_setup();                       // start wifi mode and ESP-NOW
  peer_setup(receiverAddress);        // configure receiving address
  set_data_receiver(&data);      // configure the receiver ESP32 to update data's values upon reception
}

void loop()
{
  data.vx = 34;
  data.vy = 70;
  data.sw = 0;


  send_data(receiverAddress, data);       // send the data
  Serial.print("VX: ");               // Print VX
  Serial.println(data.vx);

  delay(1000);
}
```

Arduino Functions

- Understand the purpose of each function in a code (Don't just blindly copy and paste code!)

- Visit the [Arduino Language Reference]() for an explanation of the most common Arduino functions

Language Reference

Arduino programming language can be divided in three main parts: functions, values (variables and constants), and structure.

Functions | Variables | Structure

For controlling the Arduino board and performing computations.

Digital I/O

digitalRead()
digitalWrite()
pinMode()

Math

abs()
constrain()
map()
max()
min()
pow()
sq()
sqrt()

Bits and Bytes

bit()
bitClear()
bitRead()
bitSet()
bitWrite()
highByte()
lowByte()

Analog I/O

analogRead()
analogReadResolution()
analogReference()
analogWrite()
analogWriteResolution()

Trigonometry

cos()
sin()
tan()

External Interrupts

attachInterrupt()
detachInterrupt()
digitalPinToInterrupt()

Using the Serial Monitor

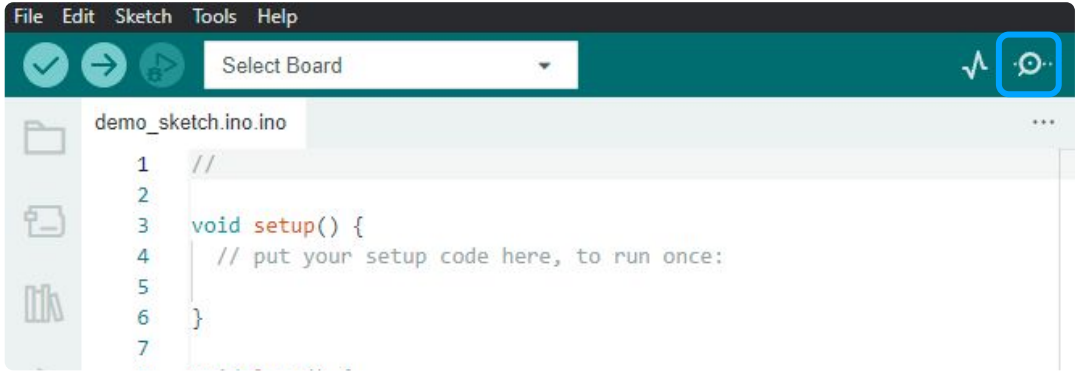

- `Serial.print` is an excellent tool to **help debug programs** and **tune sensors**

SECTION VI

Analog Joystick Exercise

Analog Joystick

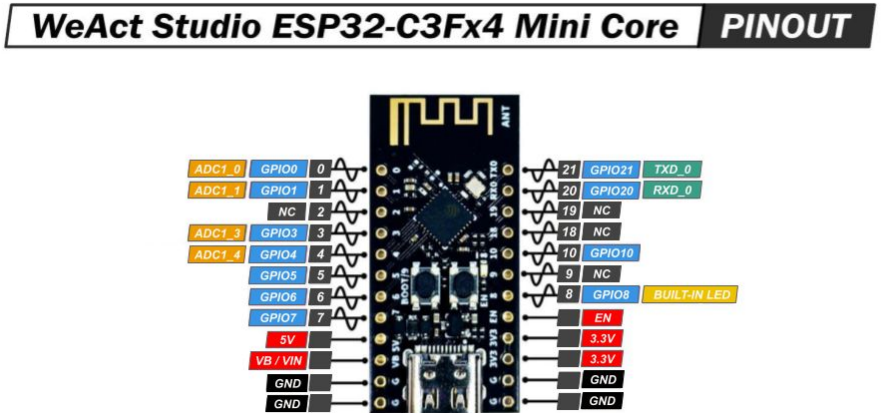

- Take out your parts kits! We will practice the fundamentals once again
- Goal: Get data from Joystick and use it to do something
- Step 1: Connect the Joystick to the ESP32
- Step 2: Use Arduino Functions to read data from the Joystick

Tips

- **Several** distance measurements should be taken when encountering an obstacle, and the rover autonomously decides where to move next
- See lecture 4 to review the **voltage divider** that is required when using the ultrasonic sensor
- To power your ESP32 via battery, do NOT plug the source directly into 3.3V/5V. Those are voltage **outputs**, and what you want is an **input** (Vbus)
- Good luck and have fun!

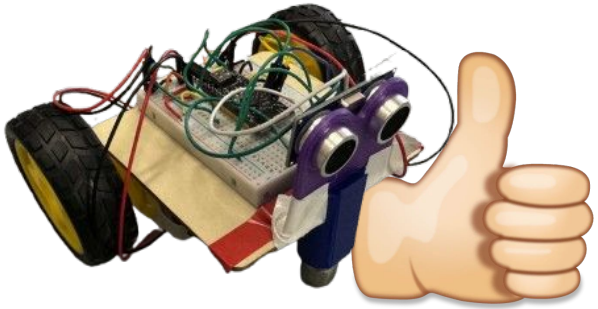

FAIR USE DISCLAIMER

Copyright Disclaimer under section 107 of the Copyright Act 1976, allowance is made for “fair use” for purposes such as criticism, comment, news reporting, teaching, scholarship, education and research.

Fair use is a use permitted by copyright statute that might otherwise be infringing.

Non-profit, educational or personal use tips the balance in favor of fair use.

CC BY-NC-SA 4.0

This work by the Institute of Electrical and Electronics Engineers, UC Irvine Branch, is licensed under CC BY-NC-SA 4.0